Review

- Multicast Routing
  - Three options
  - source-based tree: one tree per source
    - shortest path trees
    - reverse path forwarding
  - group-shared tree: group uses one tree
    - minimal spanning (Steiner)
    - center-based trees
- Data Link Layer Services
  - Error detection
    - Single bit
    - Two dimensional
- Recitation tomorrow for Project 3

Some slides are in courtesy of J. Kurose and K. Ross

Overview

- Error Detection: CRC
- Multiple access protocols
- LAN addresses and ARP
- Ethernet

Checksumming: Cyclic Redundancy Check

- view data bits, D, as a binary number
- choose r+1 bit pattern (generator), G
- goal: choose r CRC bits, R, such that
  - <D,R> exactly divisible by G (modulo 2)
  - receiver knows G, divides <D,R> by G. If non-zero remainder: error detected!
  - can detect all burst errors less than r+1 bits
- widely used in practice (ATM, HDCL)

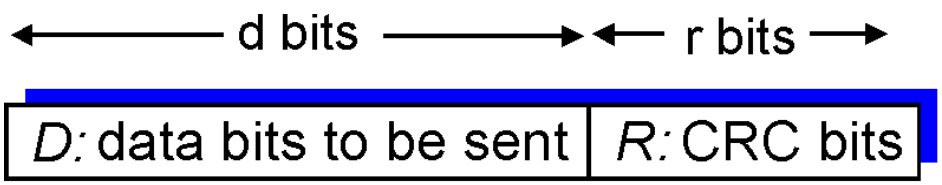

bit pattern

$$D * 2^r \quad \text{XOR} \quad R$$

mathematical formula

CRC Example

Want:

$D \cdot 2^r$ XOR R = nG

equivalently:

$D \cdot 2^r$ = nG XOR R

equivalently:

if we divide $D \cdot 2^r$ by G, want remainder R

$$R = \text{remainder}\left[\frac{D \cdot 2^r}{G}\right]$$

```
                101011
        ____________________
1001 ) 101110000
G      1001                 D
        101
        000
         1010
         1001
           110
           000
           1100
           1001
            1010
            1001
             011
R
```

Overview

- Error Detection: CRC
- Multiple access protocols
- LAN addresses and ARP
- Ethernet

Multiple Access Links and Protocols

Two types of "links":

- point-to-point
  - PPP for dial-up access
  - point-to-point link between Ethernet switch and host
- broadcast (shared wire or medium)
  - traditional Ethernet
  - upstream HFC
  - 802.11 wireless LAN

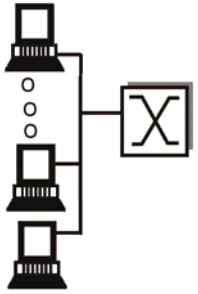

shared wire
(e.g. Ethernet)

shared wireless
(e.g. Wavelan)

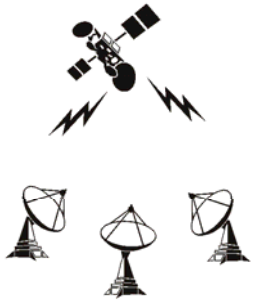

satellite

cocktail party

Multiple Access protocols

- single shared broadcast channel
- two or more simultaneous transmissions by nodes: interference
  - only one node can send successfully at a time

multiple access protocol

- distributed algorithm that determines how nodes share channel, i.e., determine when node can transmit
- communication about channel sharing must use channel itself!

Ideal Multiple Access Protocol

Broadcast channel of rate R bps

1. When one node wants to transmit, it can send at rate R.
2. When M nodes want to transmit, each can send at average rate R/M
3. Fully decentralized:
   - no special node to coordinate transmissions
   - no synchronization of clocks, slots
4. Simple

MAC Protocols: a taxonomy

Three broad classes:

- Channel Partitioning
  - divide channel into smaller "pieces" (time slots, frequency, code) – TDMA, FDMA, CDMA
  - allocate piece to node for exclusive use
- Random Access
  - channel not divided, allow collisions
  - "recover" from collisions

Random Access Protocols

- When node has packet to send
  - transmit at full channel data rate R.
  - no *a priori* coordination among nodes
- two or more transmitting nodes -> "collision",
- random access MAC protocol specifies:
  - how to detect collisions
  - how to recover from collisions (e.g., via delayed retransmissions)
- Examples of random access MAC protocols:
  - slotted ALOHA
  - ALOHA
  - CSMA, CSMA/CD, CSMA/CA

Slotted ALOHA

Assumptions

- all frames same size
- time is divided into equal size slots, time to transmit 1 frame
- nodes start to transmit frames only at beginning of slots
- nodes are synchronized
- if 2 or more nodes transmit in slot, all nodes detect collision

Operation

- when node obtains fresh frame, it transmits in next slot
- no collision, node can send new frame in next slot
- if collision, node retransmits frame in each subsequent slot with prob. p until success

Slotted ALOHA

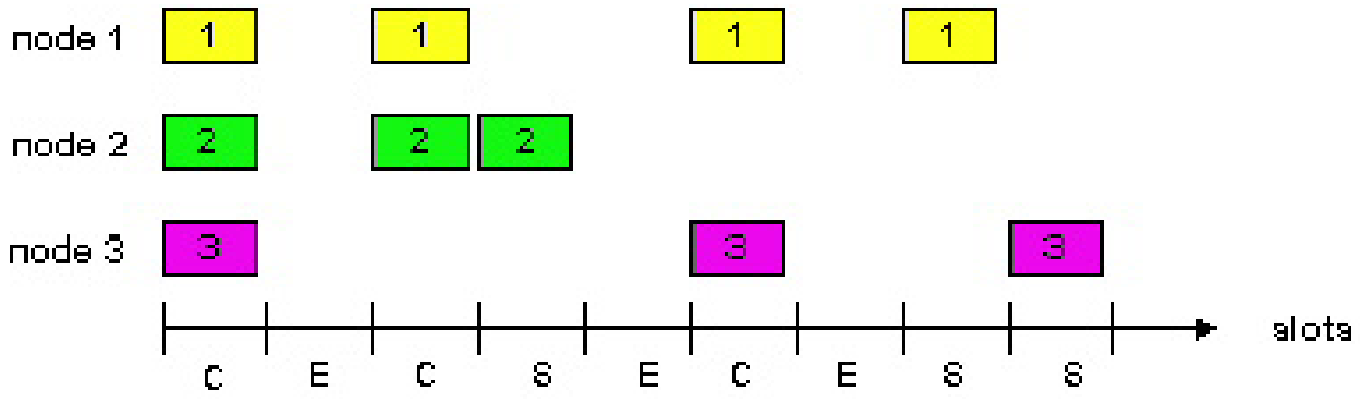

Pros

- single active node can continuously transmit at full rate of channel
- highly decentralized: only slots in nodes need to be in sync
- simple

Cons

- collisions, wasting slots
- idle slots
- nodes may be able to detect collision in less than time to transmit packet

Slotted Aloha efficiency

Efficiency is the long-run fraction of successful slots when there's many nodes, each with many frames to send

- Suppose N nodes with many frames to send, each transmits in slot with probability *p*
- prob that 1st node has success in a slot $= p(1-p)^{N-1}$
- prob that any node has a success $= Np(1-p)^{N-1}$

- For max efficiency with N nodes, find p* that maximizes $Np(1-p)^{N-1}$
- For many nodes, take limit of $Np^*(1-p^*)^{N-1}$ as N goes to infinity, gives $1/e = .37$

At best: channel used for useful transmissions 37% of time!

CSMA (Carrier Sense Multiple Access)

CSMA: listen before transmit:

- If channel sensed idle: transmit entire frame
- If channel sensed busy, defer transmission

- Human analogy: don't interrupt others!

CSMA collisions

collisions *can* still occur:
propagation delay means two nodes may not hear each other's transmission

collision:
entire packet transmission time wasted

note:
role of distance & propagation delay in determining collision probability

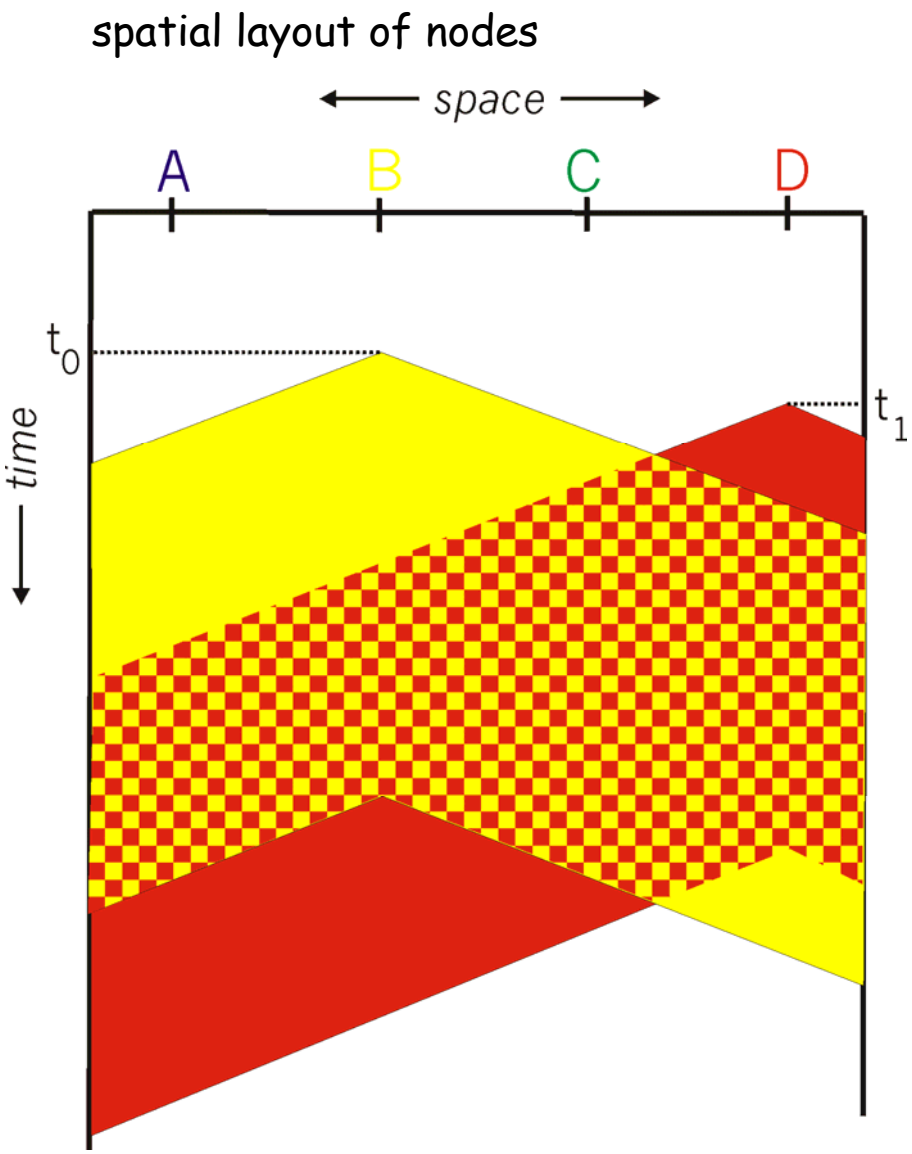

CSMA/CD (Collision Detection)

CSMA/CD: carrier sensing, deferral as in CSMA

- collisions *detected* within short time
- colliding transmissions aborted, reducing channel wastage

- collision detection:
  - easy in wired LANs: measure signal strengths, compare transmitted, received signals
  - difficult in wireless LANs: receiver shut off while transmitting
- human analogy: the polite conversationalist

CSMA/CD collision detection

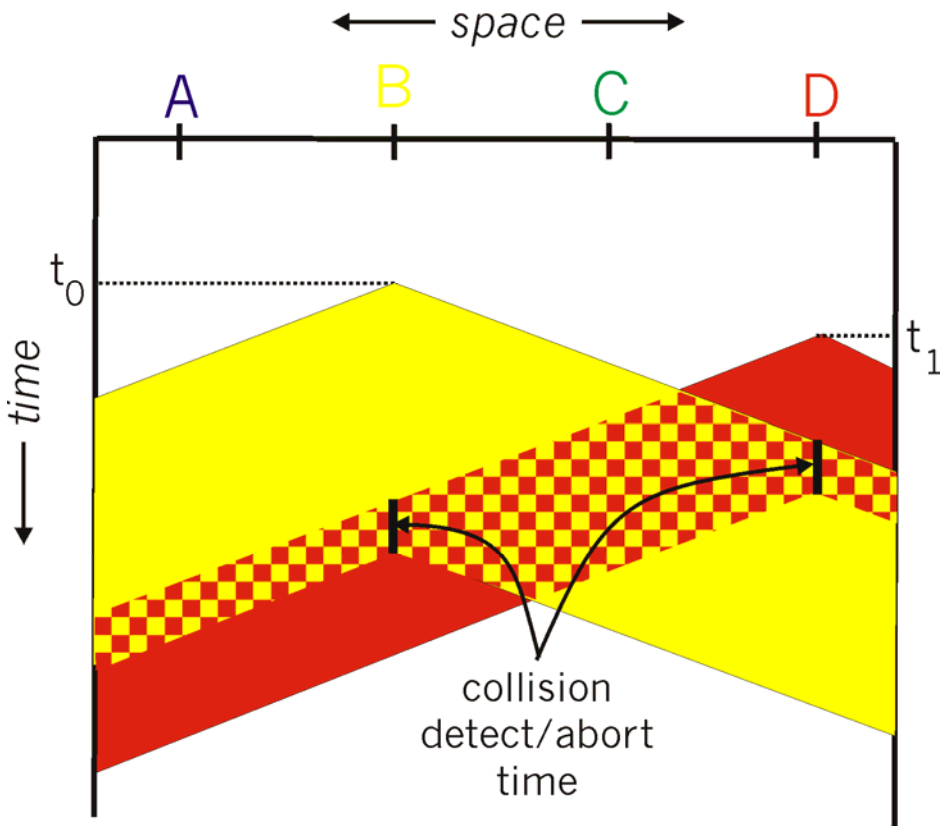

Summary of MAC protocols

- What do you do with a shared media?
  - Channel Partitioning, by time, frequency or code
    - Time Division,Code Division, Frequency Division
  - Random partitioning (dynamic),
    - ALOHA, CSMA, CSMA/CD
    - carrier sensing: easy in some technologies (wire), hard in others (wireless)
    - CSMA/CD used in Ethernet

Overview

- Error Detection: CRC
- Multiple access protocols
- LAN addresses and ARP
- Ethernet

LAN technologies

Data link layer so far:

- services, error detection/correction, multiple access

Next: LAN technologies

- addressing
- Ethernet
- hubs, bridges, switches
- 802.11
- PPP
- ATM

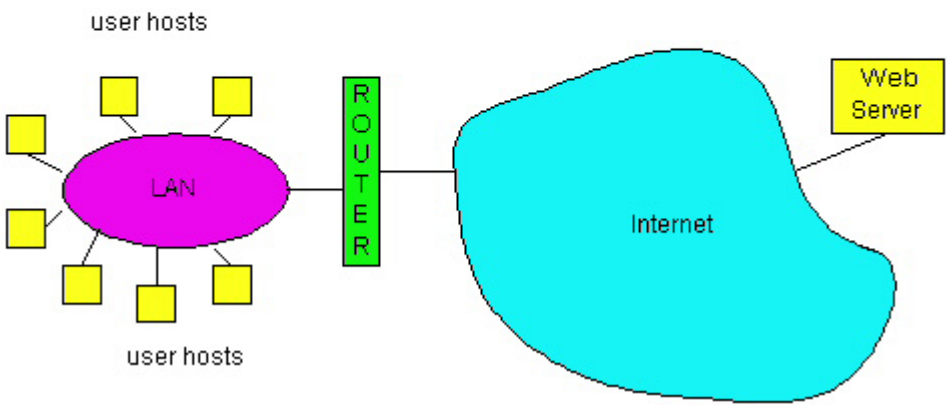

LAN Addresses and ARP

32-bit IP address:

- *network-layer* address
- used to get datagram to destination IP network (recall IP network definition)

LAN (or MAC or physical or Ethernet) address:

- used to get datagram from one interface to another physically-connected interface (same network)
- 48 bit MAC address (for most LANs) burned in the adapter ROM

LAN Addresses and ARP

Each adapter on LAN has unique LAN address

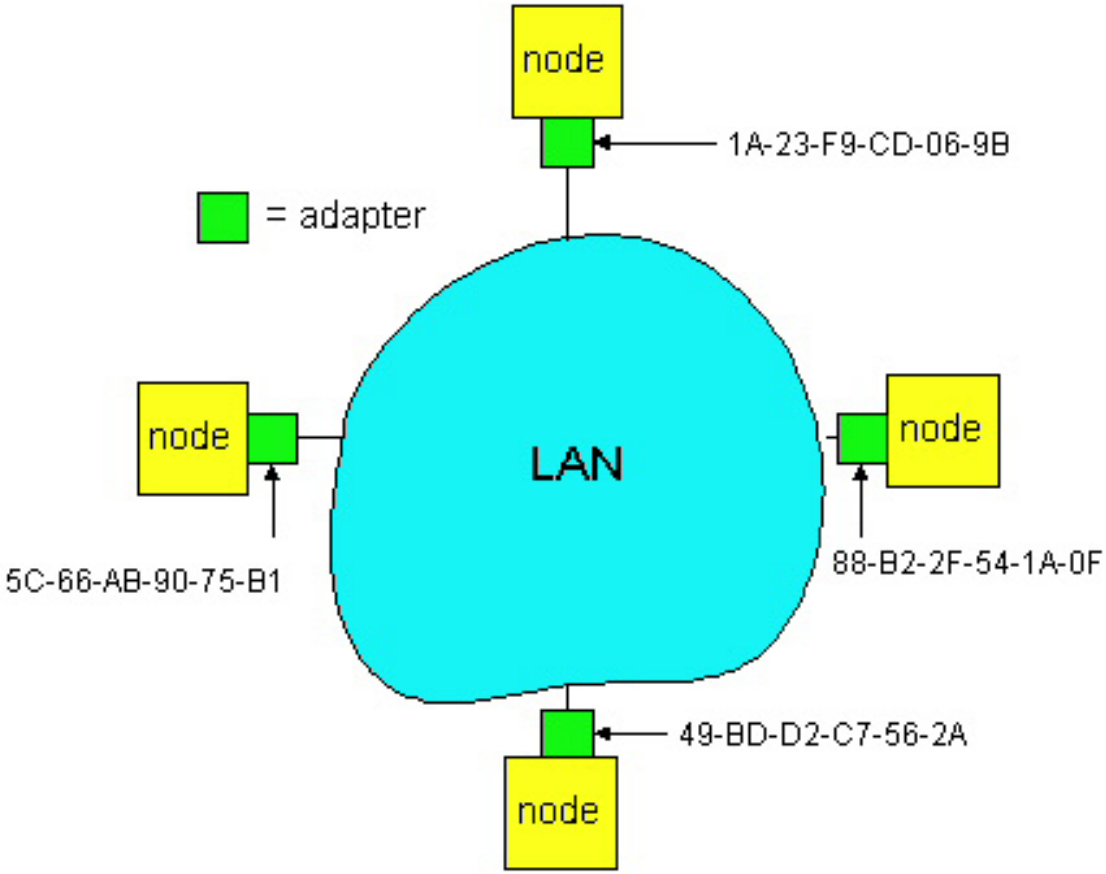

LAN Address (more)

- MAC address allocation administered by IEEE
- manufacturer buys portion of MAC address space (to assure uniqueness)
- Analogy:

  (a) MAC address: like Social Security Number

  (b) IP address: like postal address
- MAC flat address => portability
  - can move LAN card from one LAN to another
- IP hierarchical address NOT portable
  - depends on IP network to which node is attached

Recall earlier routing discussion

Starting at A, given IP datagram addressed to B:

- look up net. address of B, find B on same net. as A
- link layer send datagram to B inside link-layer frame

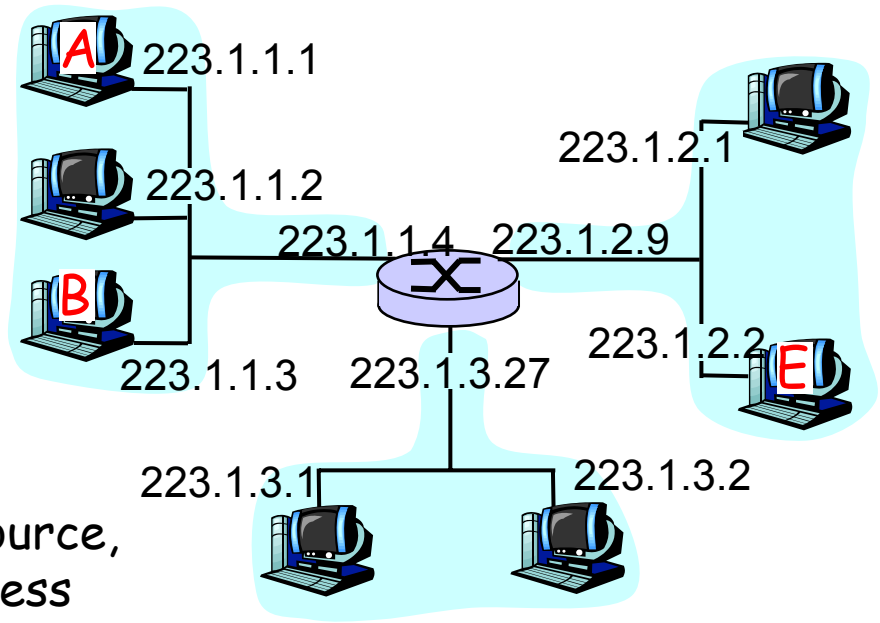

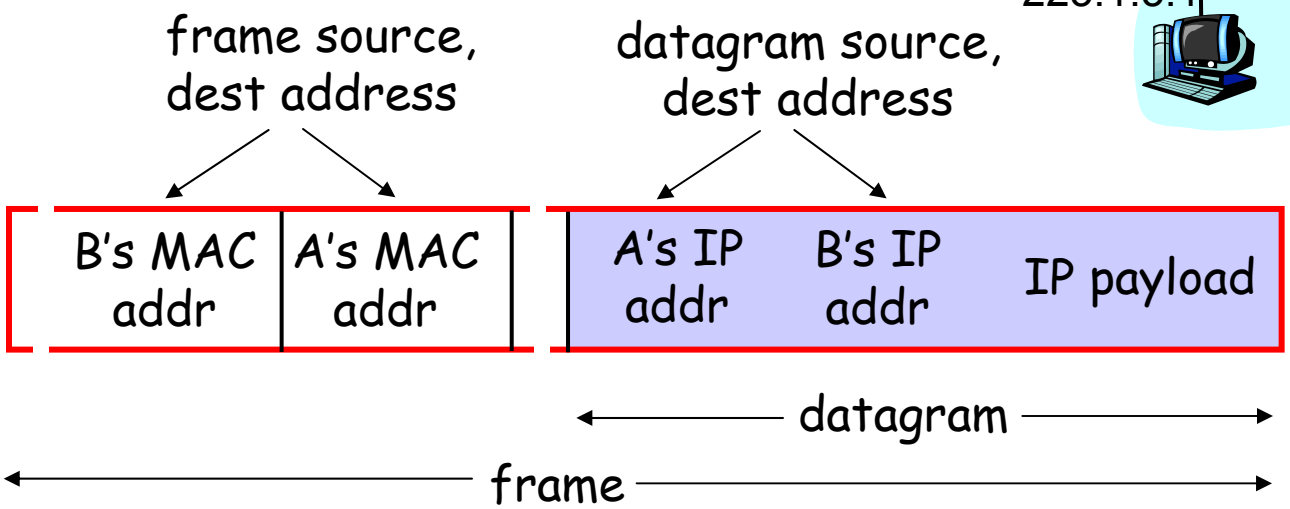

ARP: Address Resolution Protocol

Question: how to determine MAC address of B knowing B's IP address?

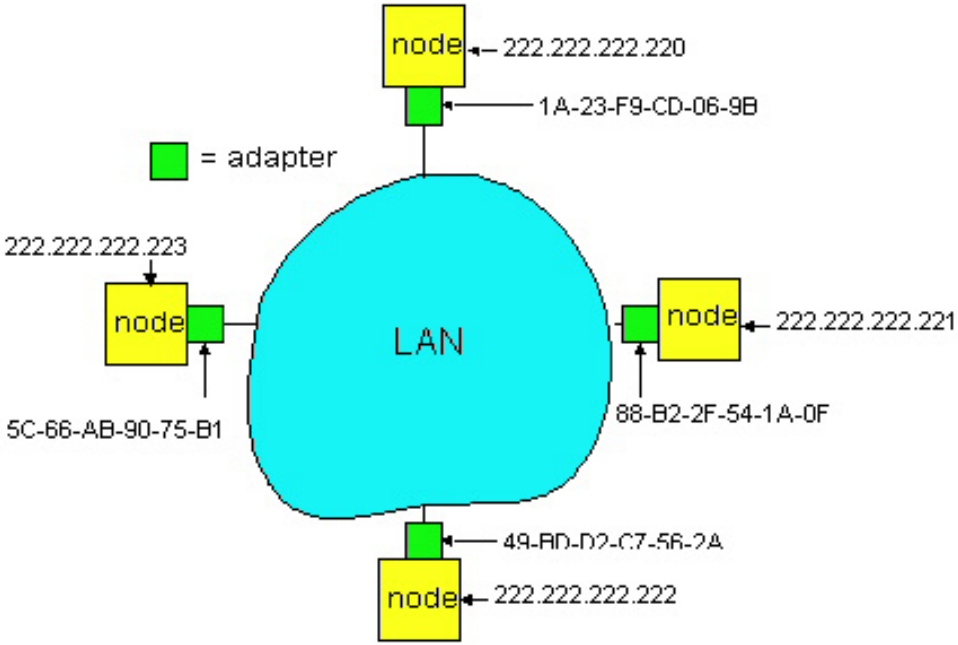

- Each IP node (Host, Router) on LAN has ARP table
- ARP Table: IP/MAC address mappings for some LAN nodes

  < IP address; MAC address; TTL>

  - TTL (Time To Live): time after which address mapping will be forgotten (typically 20 min)

ARP protocol

- A wants to send datagram to B, and A knows B's IP address.
- Suppose B's MAC address is not in A's ARP table.
- A broadcasts ARP query packet, containing B's IP address
  - all machines on LAN receive ARP query
- B receives ARP packet, replies to A with its (B's) MAC address
  - frame sent to A's MAC address (unicast)
- A caches (saves) IP-to-MAC address pair in its ARP table until information becomes old (times out)
  - soft state: information that times out (goes away) unless refreshed
- ARP is "plug-and-play":
  - nodes create their ARP tables without intervention from net administrator

Routing to another LAN

walkthrough: send datagram from A to B via R

assume A know's B IP address

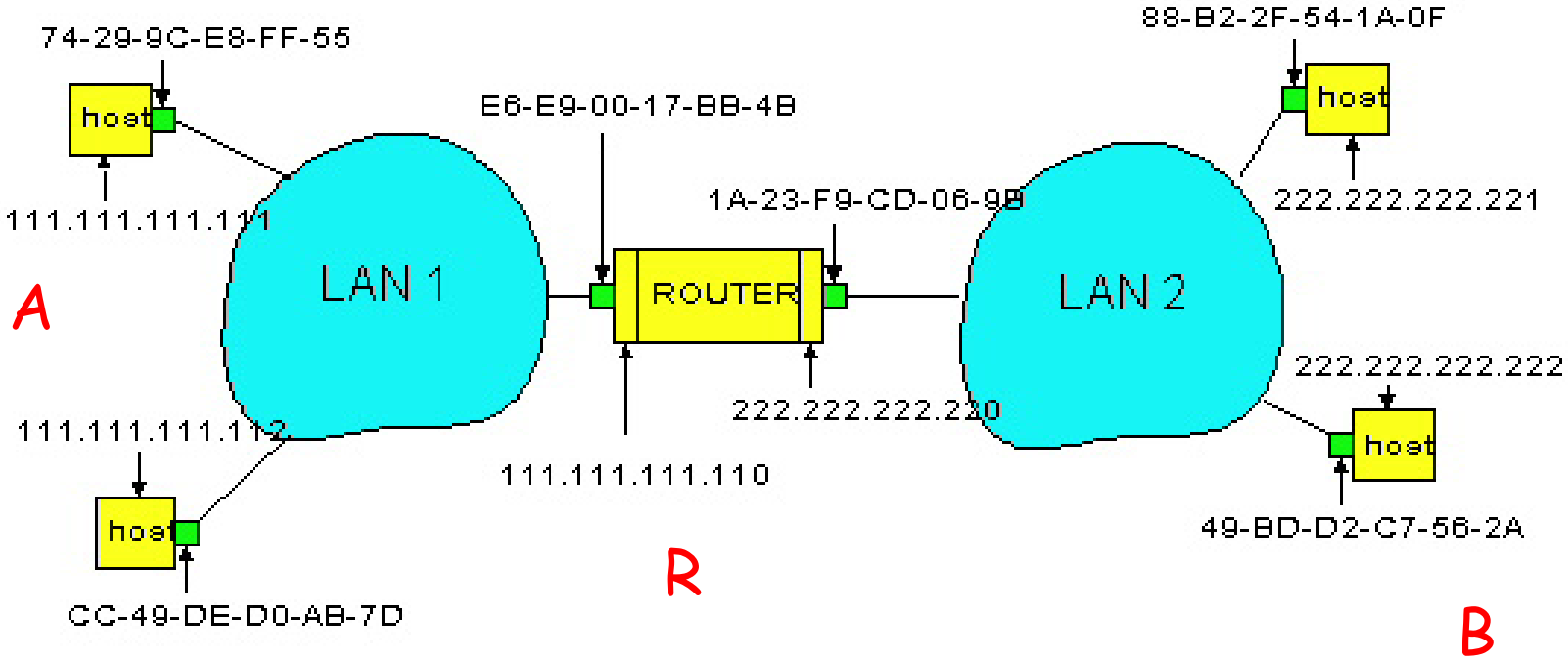

- Two ARP tables in router R, one for each IP network (LAN)

- A creates datagram with source A, destination B
- A uses ARP to get R's MAC address for 111.111.111.110
- A creates link-layer frame with R's MAC address as dest, frame contains A-to-B IP datagram
- A's data link layer sends frame
- R's data link layer receives frame
- R removes IP datagram from Ethernet frame, sees its destined to B
- R uses ARP to get B's physical layer address
- R creates frame containing A-to-B IP datagram sends to B

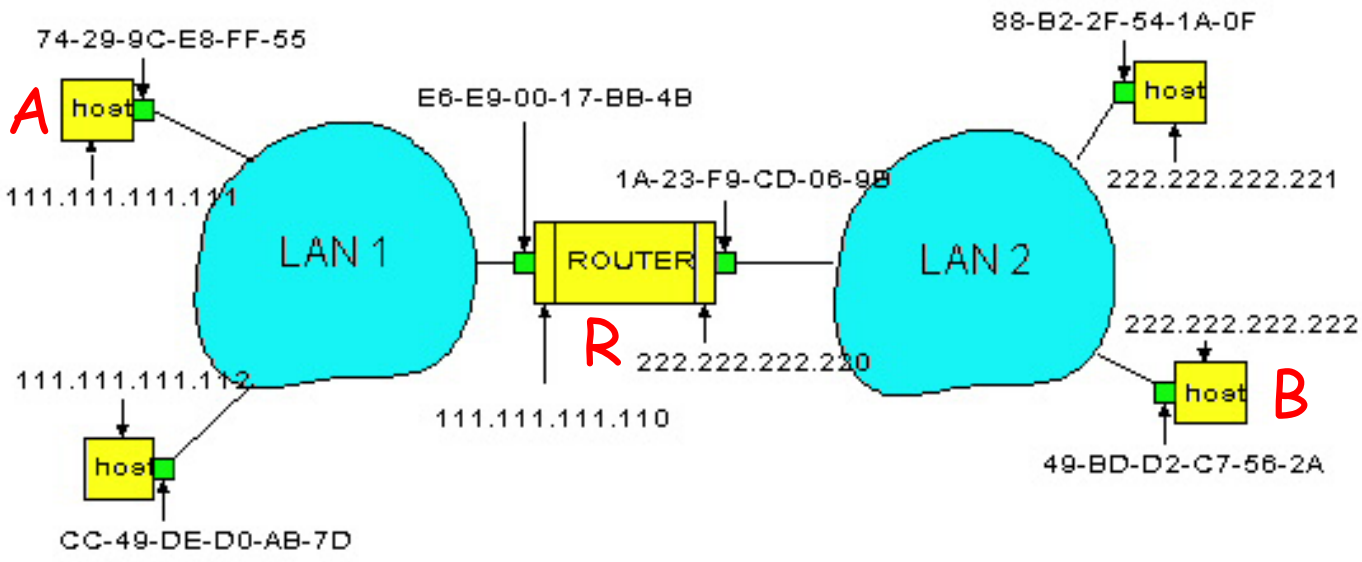

Overview

- Error Detection: CRC
- Multiple access protocols
- LAN addresses and ARP
- Ethernet

Ethernet Frame Structure

Sending adapter encapsulates IP datagram (or other network layer protocol packet) in Ethernet frame

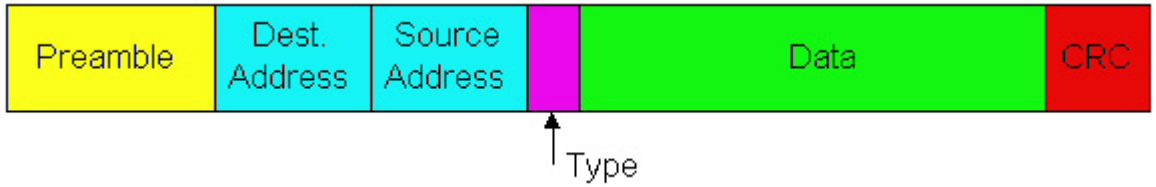

Preamble:

- 7 bytes with pattern 10101010 followed by one byte with pattern 10101011
- used to synchronize receiver, sender clock rates

Ethernet Frame Structure (more)

- Addresses: 6 bytes
  - if adapter receives frame with matching destination address, or with broadcast address (eg ARP packet), it passes data in frame to net-layer protocol
  - otherwise, adapter discards frame
- Type: indicates the higher layer protocol, mostly IP but others may be supported such as Novell IPX and AppleTalk)
- CRC: checked at receiver, if error is detected, the frame is simply dropped

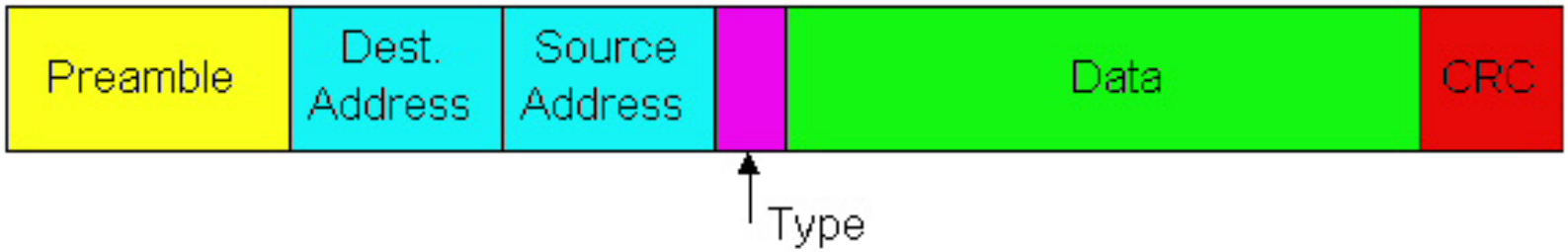

Unreliable, connectionless service

- Connectionless: No handshaking between sending and receiving adapter.
- Unreliable: receiving adapter doesn't send acks or nacks to sending adapter
  - stream of datagrams passed to network layer can have gaps
  - gaps will be filled if app is using TCP
  - otherwise, app will see the gaps

Ethernet uses CSMA/CD

- No slots
- adapter doesn't transmit if it senses that some other adapter is transmitting, that is, carrier sense
- transmitting adapter aborts when it senses that another adapter is transmitting, that is, collision detection
- Before attempting a retransmission, adapter waits a random time, that is, random access